Current part is item (8) on diagram. Available at www.oshkoshequipment.com

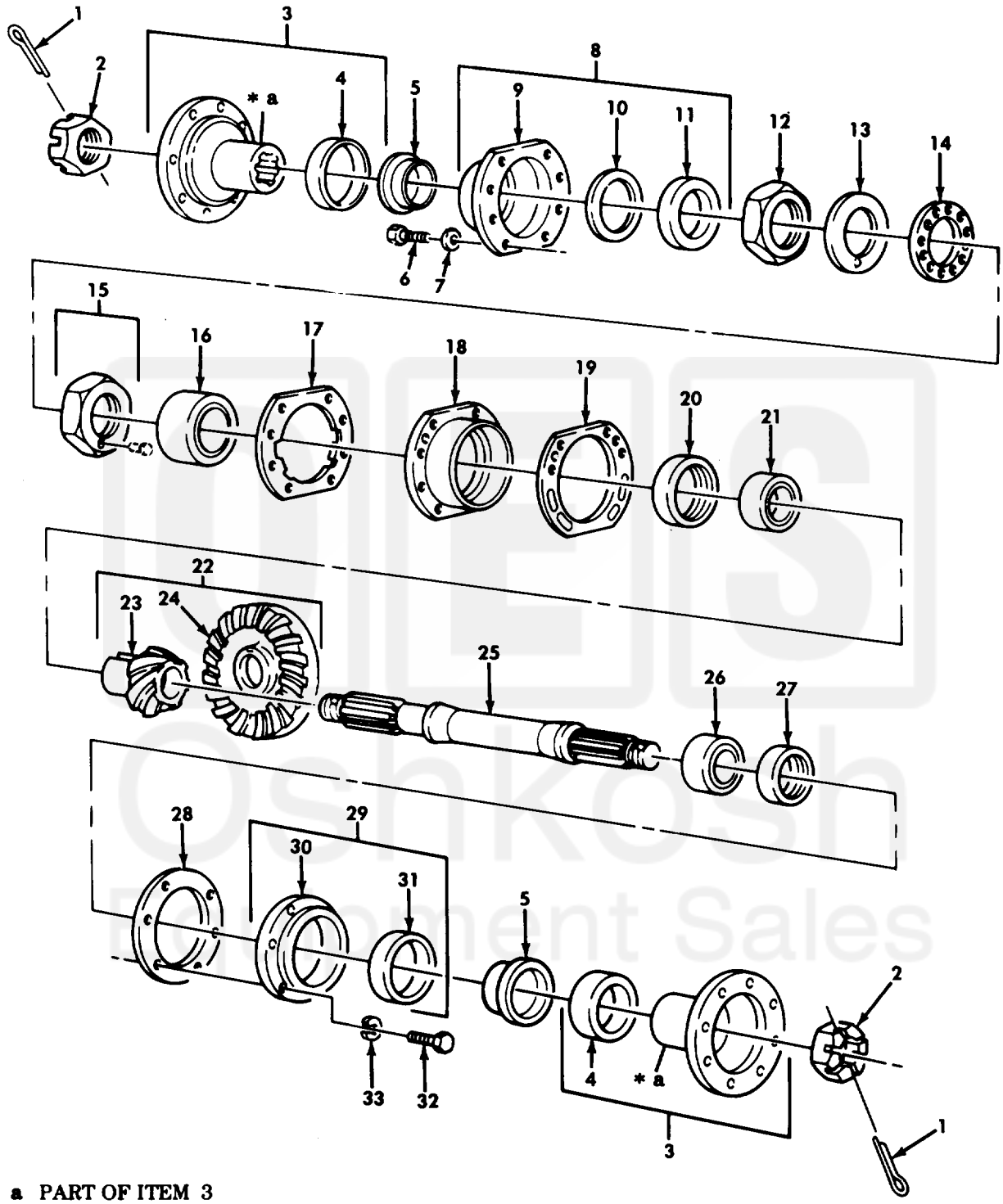

Figure 158. Front Axle Differential Through Shaft Gears, and Flange Assemblies.

Current part is item (8) on diagram. Available at www.oshkoshequipment.com

Current part is item (8) on diagram. Available at www.oshkoshequipment.com

(1) ITEM NO	(2) SMR CODE	(3) CAGEC	(4) PART NUMBER	(5) DESCRIPTION AND USABLE ON CODES(UOC)	(6) QTY
				GROUP 1002 DIFFERENTIAL	
				FIG. 158 FRONT AXLE DIFFERENTIAL THROUGH SHAFT,GEARS,AND FLANGE ASSEMBLIES	
1	PAFZZ	96906	MS24665-361	PIN,COTTER	2
2	PAFZZ	19207	7346893	NUT,PLAIN,SLOTTED,H	2
3	PAFFF	78500	A320G1957	FLANGE,COMPANION,UN	2
4	PAFZZ	19207	7535048	.DEFLECTOR,DIRT AND	2
5	PAFZZ	19207	5705699	REPAIR KIT,SLEEVE	2
6	PAFZZ	24617	180178	SCREW,CAP,HEXAGON H	8
7	PAFZZ	38597	50-4-18-17-7	WASHER,FLAT FRONT DIFFERENTIAL	8
8	PAFFF	19207	7346897	COVER ASSEMBLY	1
9	XAFZZ	19207	8758251	.COVER	1
10	PAFZZ	19207	10900396	.GASKET	1
11	PAFZZ	19207	11669023	.SEAL,PLAIN ENCASED	1
12	PAHZZ	19207	7979263	NUT,PLAIN,OCTAGON	1
13	PAHZZ	19207	8758258	WASHER,KEY	1
14	PAHZZ	19207	5139123	WASHER,KEY	1
15	PAHZZ	19207	7979308	NUT ASSY	1
16	PAHZZ	21450	703189	BEARING,ROLLER,TAPE	1
17	KFHZZ	19207	7346886	GASKET PART OF KIT P/N 7346807	1
18	PAHZZ	19207	8758202	PLATE,RETAINING,BEA	1
19	KFHZZ	19207	7346888	SHIM 0.003 PART OF KIT P/N 7346807	1
19	KFHZZ	19207	7346889	SHIM 0.005 PART OF KIT P/N 7346807	5
19	KFHZZ	19207	7346890	SHIM 0.031 PART OF P/N 7346807	1
20	KFHZZ	19207	8758209	COLLAR 0.3670 PART OF KIT P/N 5704278	1
20	KFHZZ	19207	8758211	COLLAR 0.3690 PART OF KIT P/N 5704278	1
20	KFHZZ	19207	8758213	COLLAR 0.3710 PART OF KIT P/N 5704278	1
20	KFHZZ	19207	8758215	COLLAR 0.3730 PART OF KIT P/N 5704278	1
20	KFHZZ	19207	8758219	COLLAR 0.3770 PART OF KIT P/N 5704278	1
20	KFHZZ	19207	8758221	COLLAR 0.3790 PART OF KIT P/N 5704278	1
20	KFHZZ	19207	8758223	COLLAR 0.3810 PART OF KIT P/N 5704278	1
20	KFHZZ	19207	8758225	COLLAR 0.3830 PART OF KIT P/N 5704278	1
20	KFHZZ	19207	8758227	COLLAR 0.3850 PART OF KIT P/N 5704278	1
20	KFHZZ	19207	8758229	BEARING,WASHER,THRU 0.3870 PART OF KIT P/N 5704278	1
20	KFHZZ	19207	8758231	COLLAR PART OF KIT P/N 5704278	1
20	KFHZZ	19207	8758233	COLLAR 0.3910 PART OF KIT P/N 5704278	1
20	KFHZZ	19207	8758235	COLLAR 0.3930 PART OF KIT P/N 5704278	1

Current part is item (8) on diagram. Available at www.oshkoshequipment.com

Current part is item (8) on diagram. Available at www.oshkoshequipment.com

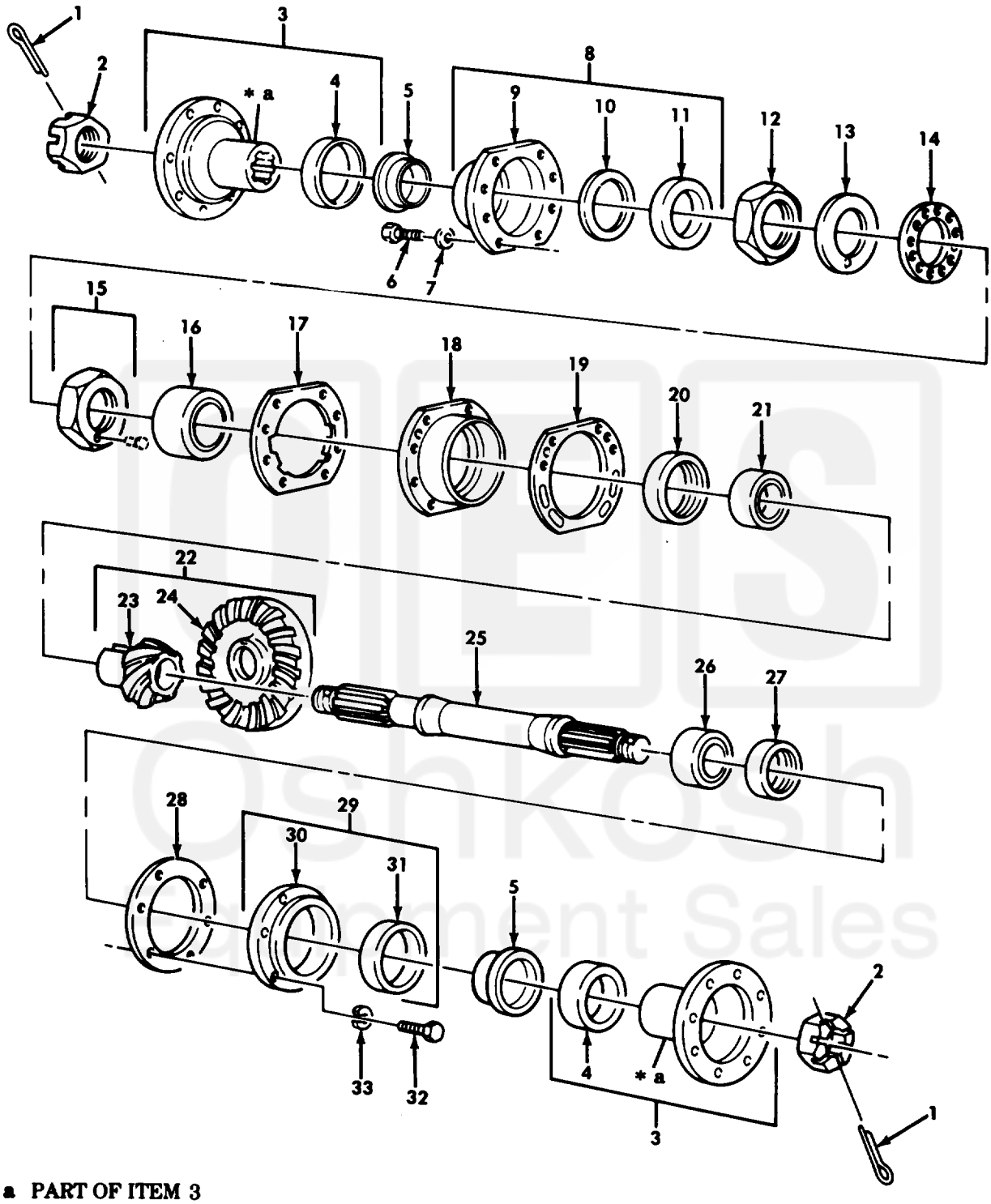

* a PART OF ITEM 3

Figure 16-4. Rear Axle Differential Through Shaft, Gears, and Flange Assemblies.

Current part is item (8) on diagram. Available at www.oshkoshequipment.com

Current part is item (8) on diagram. Available at www.oshkoshequipment.com

(1) ITEM NO	(2) SMR CODE	(3) CAGEC	(4) PART NUMBER	(5) DESCRIPTION AND USABLE ON CODES(UOC)	(6) QTY
				GROUP 1102 DIFFERENTIAL	
				FIG.164 REAR AXLE DIFFERENTIAL THROUGH SHAFT,GEARS,AND FLANGE ASSEMBLIES	
1	PAFZZ	96906	MS24665-361	PIN,COTTER	2
2	PAFZZ	19207	7346893	NUT,PLAIN,SLOTTED,H	2
3	PAFFF	78500	A3280G1957	FLANGE,COMPANION,UN	2
4	PAFZZ	19207	7535048	.DEFLECTOR,DIRT AND	1
5	PAFZZ	19207	5705699	KIT,SLEEVE WEAR	2
6	PRFZZ	24617	180178	SCREW,CAP,HEXAGON H	8
7	PAFZZ	38597	50-4-18-17-7	WASHER,FLAT	8
8	PAFFF	19207	7346897	COVER ASSEMBLY	1
9	XAFZZ	19207	8758251	.COVER	1
10	PAFZZ	19207	10900396	.GASKET	1
11	PAFZZ	19207	11669023	.SEAL,PLAIN ENCASED	1
12	PAHZZ	19207	7979263	NUT,PLAIN,OCTAGON	1
13	PAHZZ	19207	8758258	WASHER,KEY	1
14	PAHZZ	19207	5139123	WASHER,KEY	1
15	PFHZZ	19207	7979308	NUT ASSY	1
16	PAHZZ	96906	MS19081-135	BEARING,ROLLER,TAPE	1
17	KFHZZ	19207	7346886	GASKET PART OF KIT P/N 7346807	1
18	PAHZZ	19207	8758202	PLATE,RETAINING,BEA	1
19	KFHZZ	19207	7346888	SHIM 0.003 PART OF KIT P/N 7346807	1
19	KFHZZ	19207	7346889	SHIM 0.005 PART OF KIT P/N 7346807	1
19	KFHZZ	19207	7346890	SHIM 0.031 PART OF KIT P/N 7346807	1
20	KFHZZ	19207	8758209	COLLAR 0.3670 PART OF KIT P/N 5704278	1
20	KFHZZ	19207	8758211	COLLAR 0.3690 PART OF P/N 5704278	1
20	KFHZZ	19207	8758213	COLLAR 0.3710 PART OF KIT P/N 5704278	1
20	KFHZZ	19207	8758215	COLLAR 0.3730 PART OF KIT P/N 5704278	1
20	KFHZZ	19207	8758217	COLLAR 0.3750 PART OF KIT P/N 5704278	1
20	KFHZZ	19207	8758219	COLLAR 0.3770 PART OF KIT P/N 5704278	1
20	KFHZZ	19207	8758221	COLLAR 0.3790 PART OF KIT P/N 5704278	1
20	KFHZZ	19207	8758223	COLLAR 0.3810 PART OF KIT P/N 5704278	1
20	KFHZZ	19207	8758225	COLLAR 0.3830 PART OF KIT P/N 5704278	1
20	KFHZZ	19207	8758227	COLLAR 0.3850 PART OF KIT P/N 5704278	1
20	KFHZZ	19207	8758229	BEARING WASHER,THRU 0.3870 PART OF KIT P/N 5704278	1
20	KFHZZ	19207	8758231	COLLAR 0.3890 PART OF KIT P/N 5704278	1
20	KFHZZ	19207	8758235	COLLAR 0.3930 PART OF KIT P/N	1

Current part is item (8) on diagram. Available at www.oshkoshequipment.com